Classic Iron Bed - Twin and Full Size

Pre-assembly:

Please read all instructions before assembly.

For your safety, two adults are recommended for assembly.

Parts and Hardware Included:

A - Headboard – 1 pc

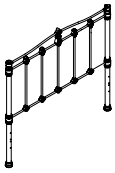

B – Footboard – 1 pc

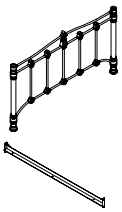

C - Side Rails – 2pcs

D – Support Slat – 3pcs

J – Finials – 4pcs

K – Bolt ¼”x1” – 8pcs

L – Lock Washer – 14pcs

M – Metal Washer – 20pcs

N – Nuts ¼” – 6pcs

O – Wrench – 1pc

P – Allen Key – 1pc

Q – Rubber Washer ¼” – 8pcs

R – Short Bolt ¼” x ¾” – 6pcs

Assembly Instructions:

1. Determine the desired location of bed. Insert Siderails (C) into the Headboard (A) and Footboard (B) by aligning the pre-drilled holes on the Siderails (C) with those on the Headboard (A) and Footboard (B). Secure using Bolts (K), Rubber Washers (Q), Metal Washers (M) and Lock Washers (L), as illustrated. Loosely tighten Bolts (K) with the Allen Key (P) until all are in place. Then, fully tighten.

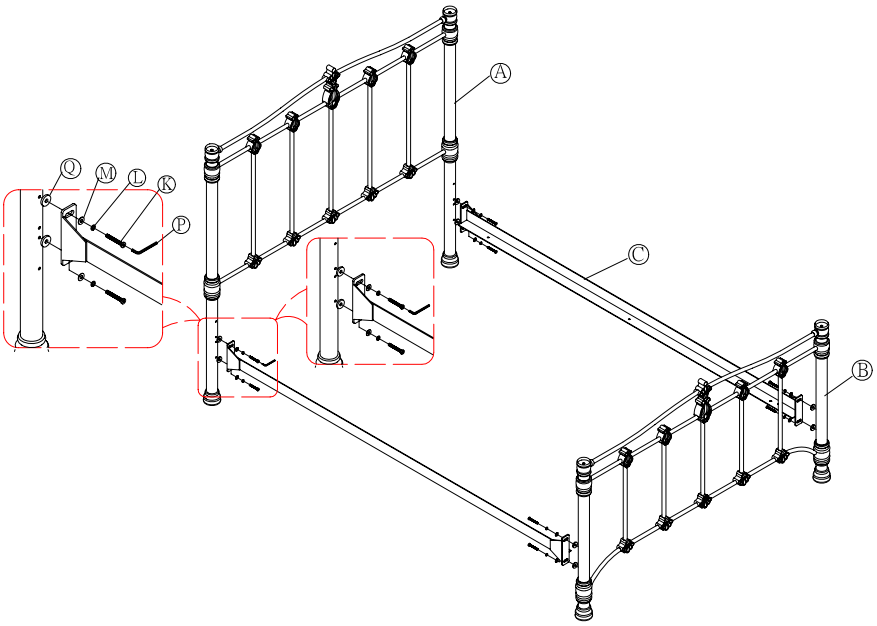

2. Put the Support Slats (D) onto Side Rails(C) as shown. Align the pre-drilled holes on Support Slats (D) to the pre-drilled holes on Side Rails (C). Secure using Short Bolts (R), Lock Washer (L), Metal Washer (M) and Nuts (N), as illustrated. Tighten the Bolts (R) with Allen Key (P) and Wrench (O).

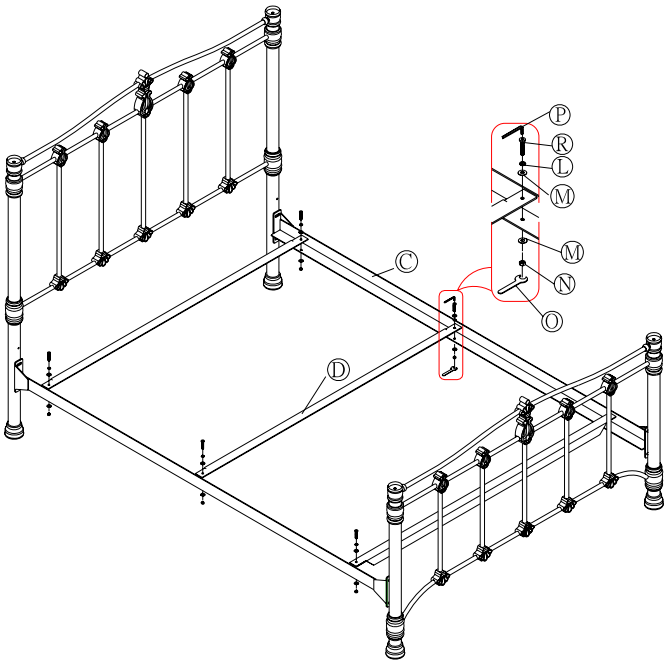

3. Insert Finials (J) through pre-drilled hole on the top of the Headboard (A) and Footboard (B), then tighten by turning clockwise.

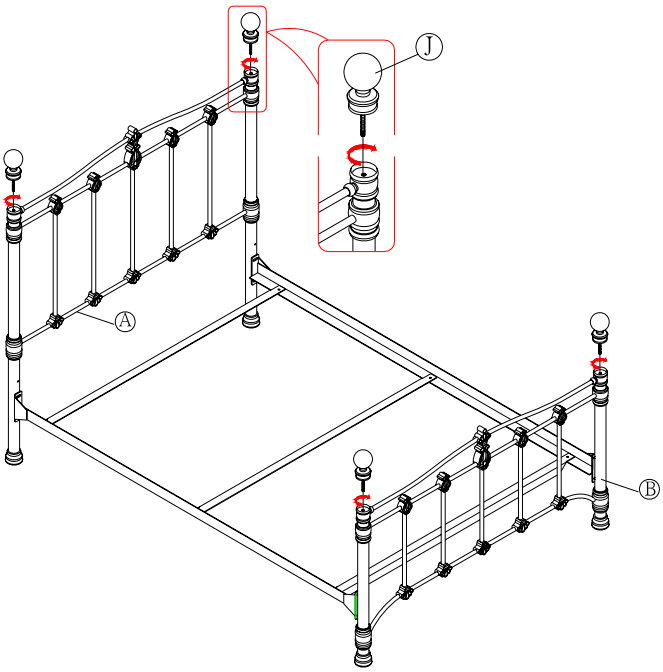

Care Instructions:

Dust with a soft, dry or slightly damp cloth. Avoid the use of cleaners and polishes.