Beadboard Media Stand

CAUTION

- The top shelf of this cart/stand is intended for use only with:
  - Plasma/LCD/DLP/HD televisions having a maximum screen size of **52** inches and/or weight of **135lbs.**
  - All other support shelves should not be loaded more than 25 lbs.
- DO NOT EXCEED RECOMMENDED LOAD. Use with products heavier than the maximum sizes and weights indicated may result in instability, causing possible injury.

PRE-ASSEMBLY:
- Please read all instructions before starting to assemble.
- Two adults are recommended for assembly..
- Save all packing materials until assembly is complete to avoid accidentally discarding smaller parts or hardware.

HARDWARE INLCUDED:

A - Wooden Knob Bolts (4 x 28mm) – 3pcs

B - Wooden Knobs – 2pcs

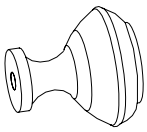

TOOLS REQUIRED (but not included):
- Phillips Head Screwdriver

ASSEMBLY:
1. Attach Wooden Knobs (B) to drawers by holding the Wooden Knobs (B) over-pre-drilled hole in drawer front and screwing the Wooden Knob Bolt (A) through the back of the drawer into the Wooden Knob (B). Tighten using Phillips Head screwdriver, as shown.
2. Repeat with second drawer.
3. Adjust the recessed levelers located at the base of each leg to keep the pedestal level.
4. Hardware should be checked periodically for tightness

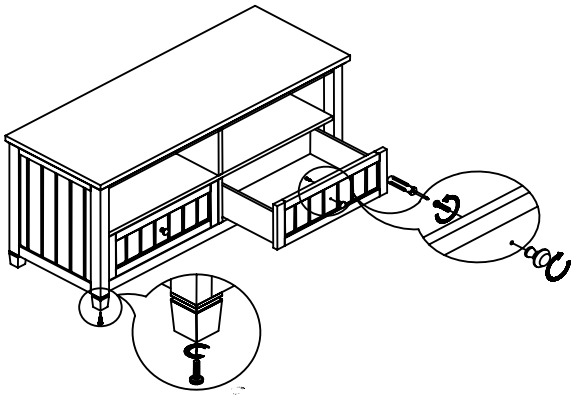

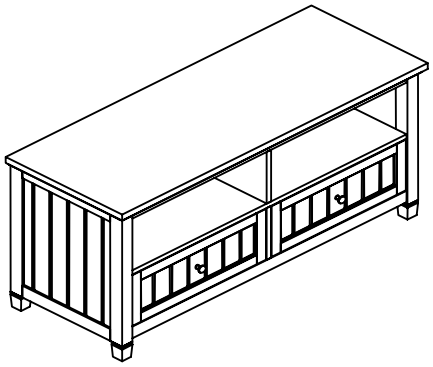

CARE INSTRUCTIONS:
- Avoid direct sunlight and excessive temperatures.
- Dust often using a clean, soft, dry and lint-free cloth.
- Slightly moisten cloth with water. A damp cloth holds dust and prevents scratching.
- Waxing is not recommended on lacquered finish.

Beadboard Media Hutch

CAUTION

- The top shelf of this cart/stand is intended for use only with:
  - Plasma/LCD/DLP/HD televisions having a maximum screen size of **52** inches and/or weight of **135lbs.**
  - All other support shelves should not be loaded more than 25 lbs.
- DO NOT EXCEED RECOMMENDED LOAD. Use with products heavier than the maximum sizes and weights indicated may result in instability, causing possible injury.

PRE-ASSEMBLY:
- Please read all instructions before starting to assemble.
- Two adults are recommended for assembly..

Save all packing materials until assembly is complete to avoid accidentally discarding smaller parts or

HARDWARE INCLUDED:

A – Wooden Knobs – 2pcs

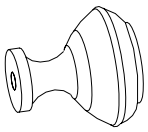

B - Wooden Knob Bolts(5/32" x 28mm) – 2pcs

C – Small Phillips Head Screws (#6 x 19mm) – 8pcs

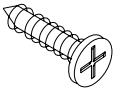

D – Mending Plates (70 x 40mm)– 2pcs

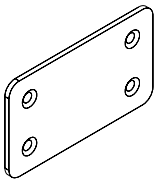

TOOLS REQUIRED (but not included):
- Phillips Head Screwdriver

ASSEMBLY:
1. On a soft, scratch-free surface, such as a carpet or rug, remove the hutch from box.
2. Attach Wooden Knobs (A) to a door by holding the Wooden Knob (A) over the pre-drilled hole in door front and screw a Wooden Knob Bolt (B) through the back of the door into the Wooden Knob (A), using a Phillips Head Screwdriver. Tighten and repeat with remaining door.

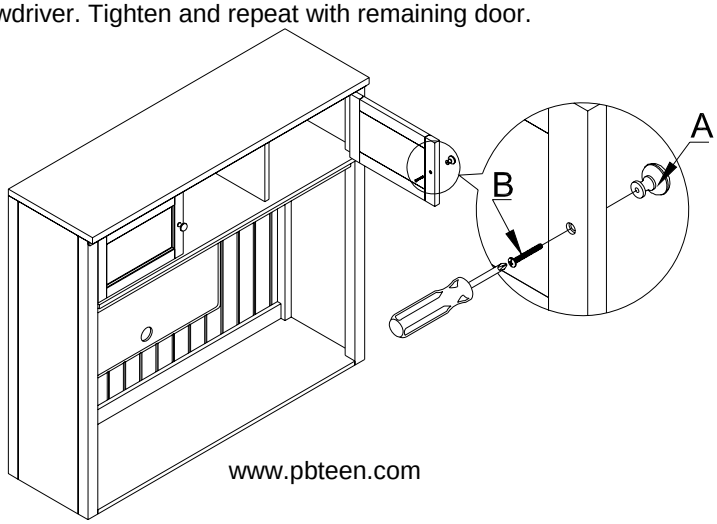

3. If attaching the Hutch to the Media Stand (sold separately), two adults should lift the hutch up, and carefully place it on the top of Media Stand, as shown.
4. Using the Mending Plates (D) and Phillips Head Screws (C), affix the back of the hutch to the Media Stand (sold separately). Align the Mending Plate (D) over the pre-drilled holes in the hutch and the Media Stand and insert the Phillips Head Screws (C) through the Mending Plate into the hutch and Media Stand, tightening with the Phillips Screwdriver. Do not fully tighten until all screws are in place. Failure to do so may cause the parts to misalign. Repeat on other side of hutch and fully tighten all screws. For assembly of the Media Stand, please refer to the assembly instruction for the Media Stand.

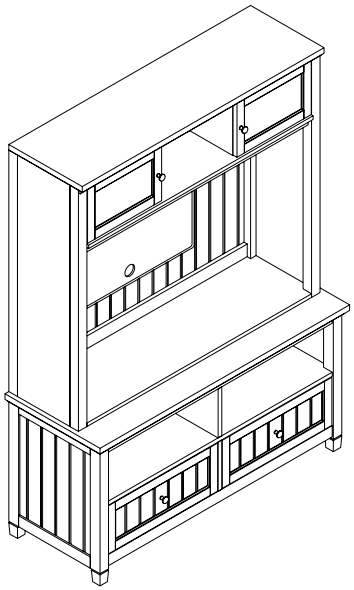

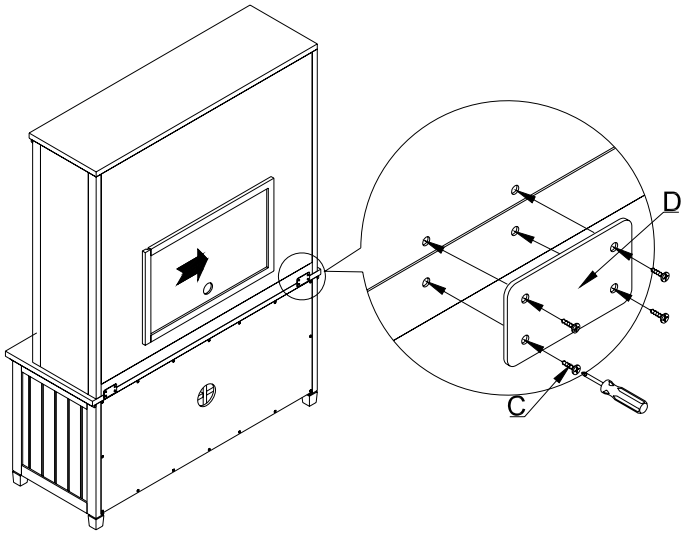

CARE INSTRUCTIONS:

- Avoid direct sunlight and excessive temperatures.
- Dust often using a clean, soft, dry and lint-free cloth.
- Slightly moisten cloth with water. A damp cloth holds dust and prevents scratching.
- Waxing is not recommended on lacquered finish.

Furniture Tipping Restraint

Young children may be injured by tipping furniture. The use of a tipping restraint is highly recommended.

When properly installed, this restraint could provide protection against the unexpected tipping of furniture due to small tremors, bumping or climbing. We recommend mounting this restraint to a wall stud.

WARNING: This product is only a deterrent. It is not a substitute for proper adult supervision.

Hardware Included:

A - (2) Brackets

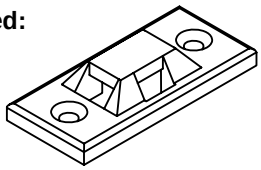

B - (2) Long screws (6 x 32mm)

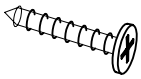

C - (2) Short screws (6 x 20mm)

D - (1) Nylon strap

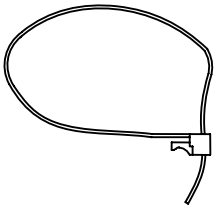

Installation Instructions:

1. Locate a wall stud behind your furniture. Position a Bracket (A) on the stud approximately 1" below the top of the furniture. Mark and drill pilot hole into the center of the stud with a 3/32" drill bit. Attach a Bracket (A) to the stud with the Long Screws (B) provided.

2. On the back of the furniture, the second Bracket (A) will need to be attached to the furniture frame at the top**.** To do this, temporarily move the furniture into its final position and mark the location of the wall's Bracket (A) on the furniture frame with a pencil.

3. Move the furniture away from the wall and place a Bracket (A) on the mark. Using the marks from the previous step as a guide, drill holes for screws with a 3/32" drill bit. Attach the bracket to the furniture with the Short Screws (C) provided.

4. Move the furniture into its final position, taking care to line up the wall bracket with the furniture bracket. Thread the Nylon Strap (D) through the Bracket and clinch as shown in the illustration. Tighten strap until snug. Do not overtighten.

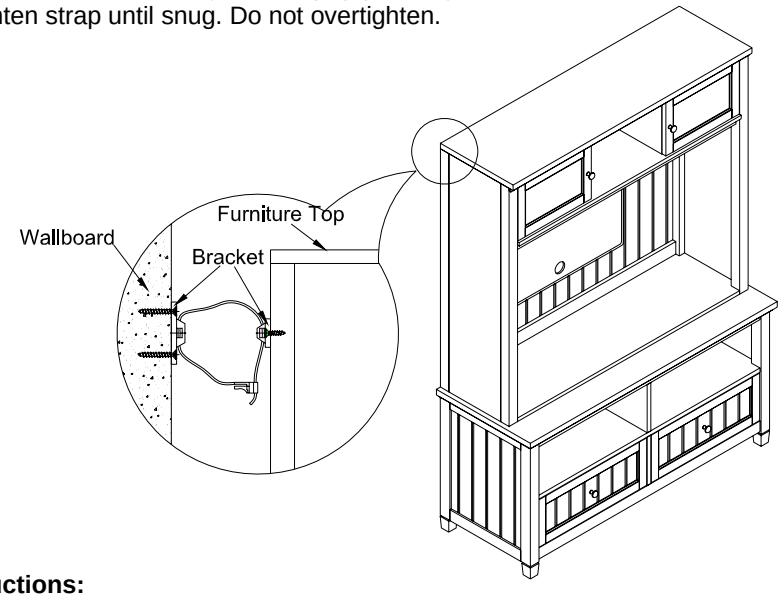

Care Instructions:

- Avoid direct sunlight and excessive temperatures.
- Dust often using a clean, soft, dry and lint-free cloth.
- Slightly moisten cloth with water. A damp cloth holds dust and prevents scratching.
- Waxing is not recommended on lacquered finish.

Beadboard Bookcase

PRE-ASSEMBLY:
- Please read all instructions before beginning assembly.
- Two-person assembly is recommended.
- Save all packing materials until assembly is complete to avoid accidentally discarding smaller parts or hardware.

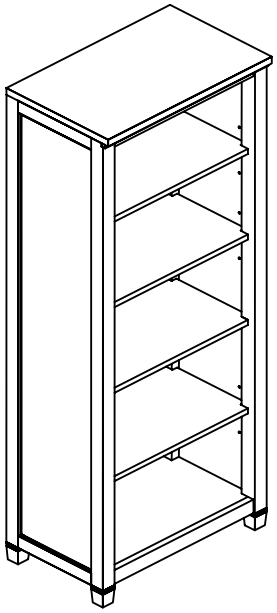

PARTS INCLUDED:
A - Adjustable shelves **(3pcs)**

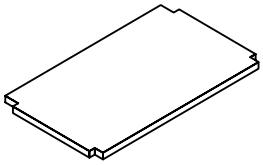

HARDWARE INCLUDED:
B - Shelf support pegs (5 x 13 x 16 x 1.5mm) (16pcs)

TOOLS REQUIRED (but not included):
- Phillip Screwdriver

ASSEMBLY:
1. On a soft, scratch-free surface, such as a carpet or rug, remove the bookcase from box.
2. Determine the desired height for shelf using the corresponding peg holes in the bookcase interior.
3. Insert the shelf support pegs (B) into the pre-drilled holes until fully secure. Place shelf (A) onto the support pegs making sure the shelf is stable. See illustration.
4. Adjust the recessed levelers located at the base of each leg to keep the bookcase level.
5. Hardware should be checked periodically for tightness.

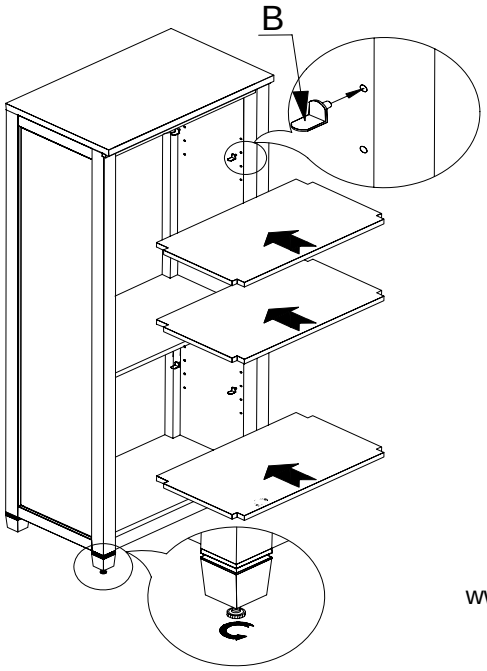

CARE INSTRUCTIONS:
- Avoid direct sunlight and excessive temperatures.
- Dust often using a clean, soft, dry and lint-free cloth.
- Slightly moisten cloth with water. A damp cloth holds dust and prevents scratching.
- Waxing is not recommended on lacquered finish.

Furniture Tipping Restraint

Young children may be injured by tipping furniture. The use of a tipping restraint is highly recommended.

When properly installed, this restraint could provide protection against the unexpected tipping of furniture due to small tremors, bumping or climbing. We recommend mounting this restraint to a wall stud.

WARNING: This product is only a deterrent. It is not a substitute for proper adult supervision.

Hardware Included:

A - (2) Brackets

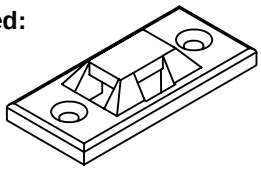

B - (2) Long screws (6 x 32)

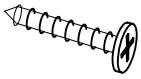

C - (2) Short screws (6 x 20)

D - (1) Nylon strap

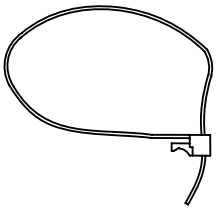

Installation Instructions:

5. Locate a wall stud behind your furniture. Position a Bracket (A) on the stud approximately 1" below the top of the furniture. Mark and drill pilot hole into the center of the stud with a 3/32" drill bit. Attach a Bracket (A) to the stud with the Long Screws (B) provided.

6. On the back of the furniture, the second Bracket (A) will need to be attached to the furniture frame at the top**.** To do this, temporarily move the furniture into its final position and mark the location of the wall's Bracket (A) on the furniture frame with a pencil.

7. Move the furniture away from the wall and place a Bracket (A) on the mark. Using the marks from the previous step as a guide, drill holes for screws with a 3/32" drill bit. Attach the bracket to the furniture with the Short Screws (C) provided.
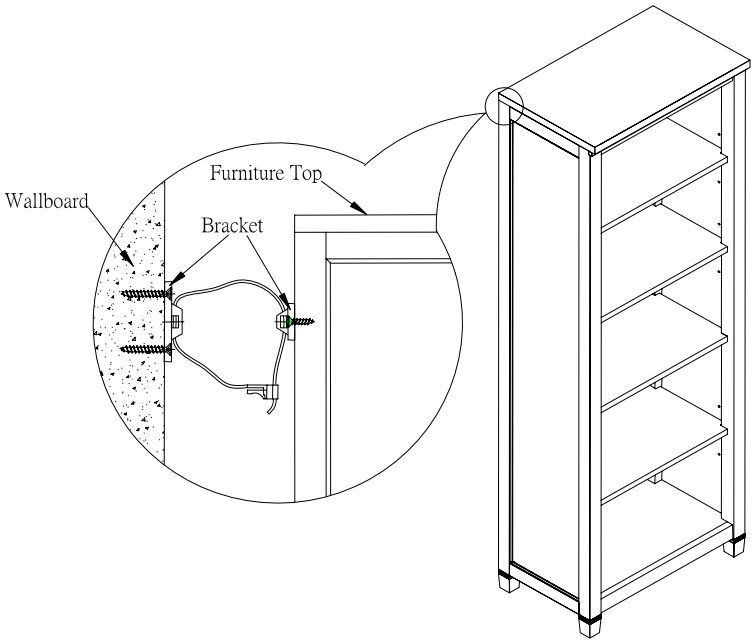
8. Move the furnition into its final position, taking care to line up the wall bracket with the furniture bracket. Thread the Nylon Strap (D) through the Bracket and cinch as shown in the illustration. Tighten strap until snug. Do not overtighten.